ASSEMBLY INSTRUCTIONS

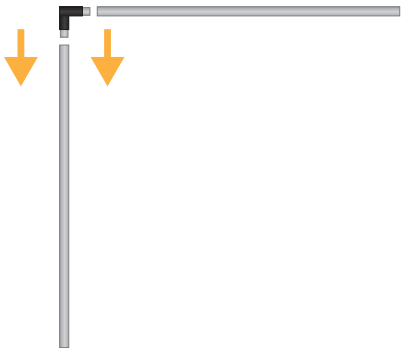

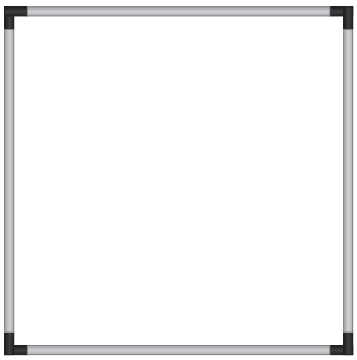

1. Compose the structure by simply joining together tubulars and fittings according to the chosen configuration.
The structure assembly process is the same for all three versions of Wave - straight, horizontal curve and vertical curve.

2. Apply the print by inserting the structure into the slot, tension and secure with the existing Velcro.

SIDE VIEW

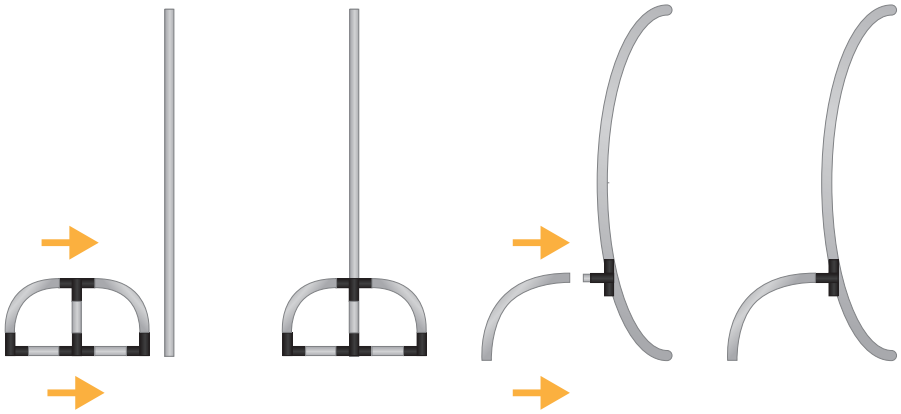

3. Apply the interlocking feet to the covered structure.
(the Wave Curva horizontal version does not require the use of support feet)

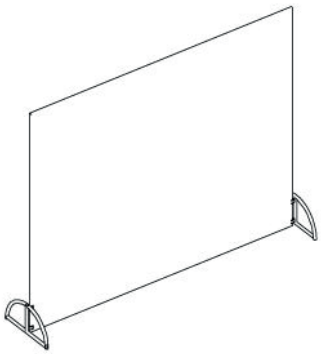

STRAIGHT

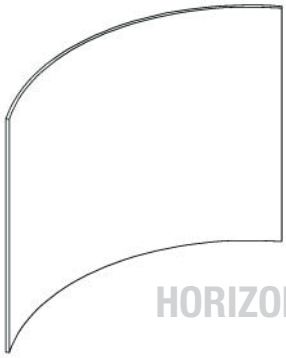

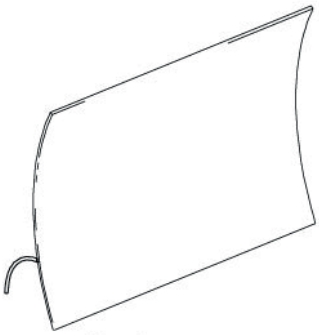

HORIZONTAL CURVE

youtube.com/StudioStandsSrl
per il video tutorial di montaggio

STUDIOSTANDS.it®
soluzioni espositive & stampa digitale

INFO FILE

Formats:
.eps .pdf .jpg .tiff
Color profile:
CMYK
Images:
included within the file at at least 100dpi resolution in 1:1 scale or 1000dpi for 1:10 scale works
Fonts:
converted into paths
Die path:
Keep ONLY the outermost path - all other paths must be removed
Crop marks/register/color bars/file info:
DO NOT insert inside the file

ABUNDANCE

CUT

SAFETY MARGIN
(Do not place important content beyond this margin)

STUDIOSTANDS.it®
soluzioni espositive & stampa digitale

WAVE 240 S version
1:2 scale template

2550mm

2660mm

STUDIOSTANDS.it®
soluzioni espositive & stampa digitale

WAVE 300 S version
1:2 scale template

2550mm

3165mm

STUDIOSTANDS.it®
soluzioni espositive & stampa digitale