INFO FILE

Formats: .eps .pdf .jpg .tiff
Color profile: CMYK
Images: 100dpi - 1000dpi (for 1:10 scale files)
Font: converted into paths
Die path: cutting path only (where present)

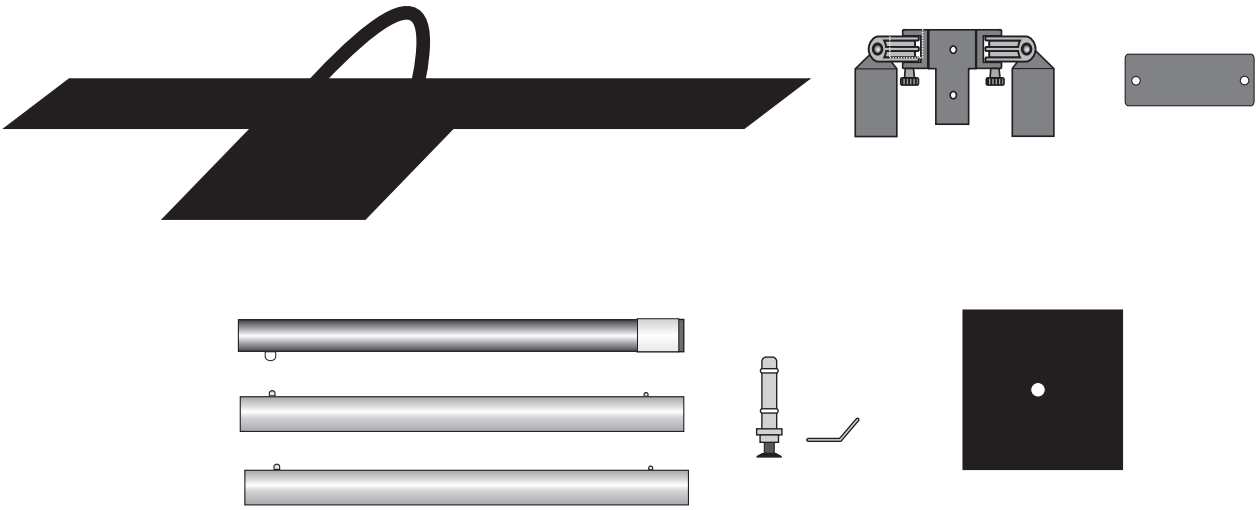

Adjustable

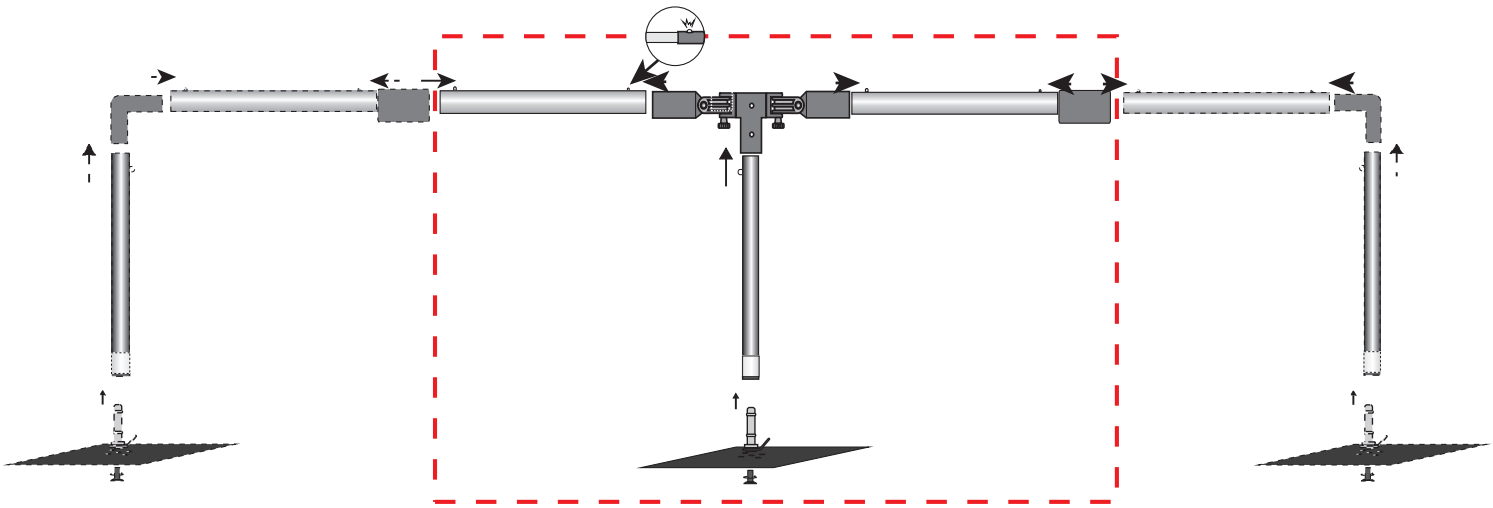

ANY ADDITIONAL FORM

STUDIOSTANDS.it®
soluzioni espositive & stampa digitale

Template Scale 1:1 - Single Barrier

INFO FILE

Formats: .eps .pdf .jpg .tiff
Color profile: CMYK
Images: 100dpi - 1000dpi (for 1:10 scale files)
Font: converted into paths
Die path: cutting path only (where present)

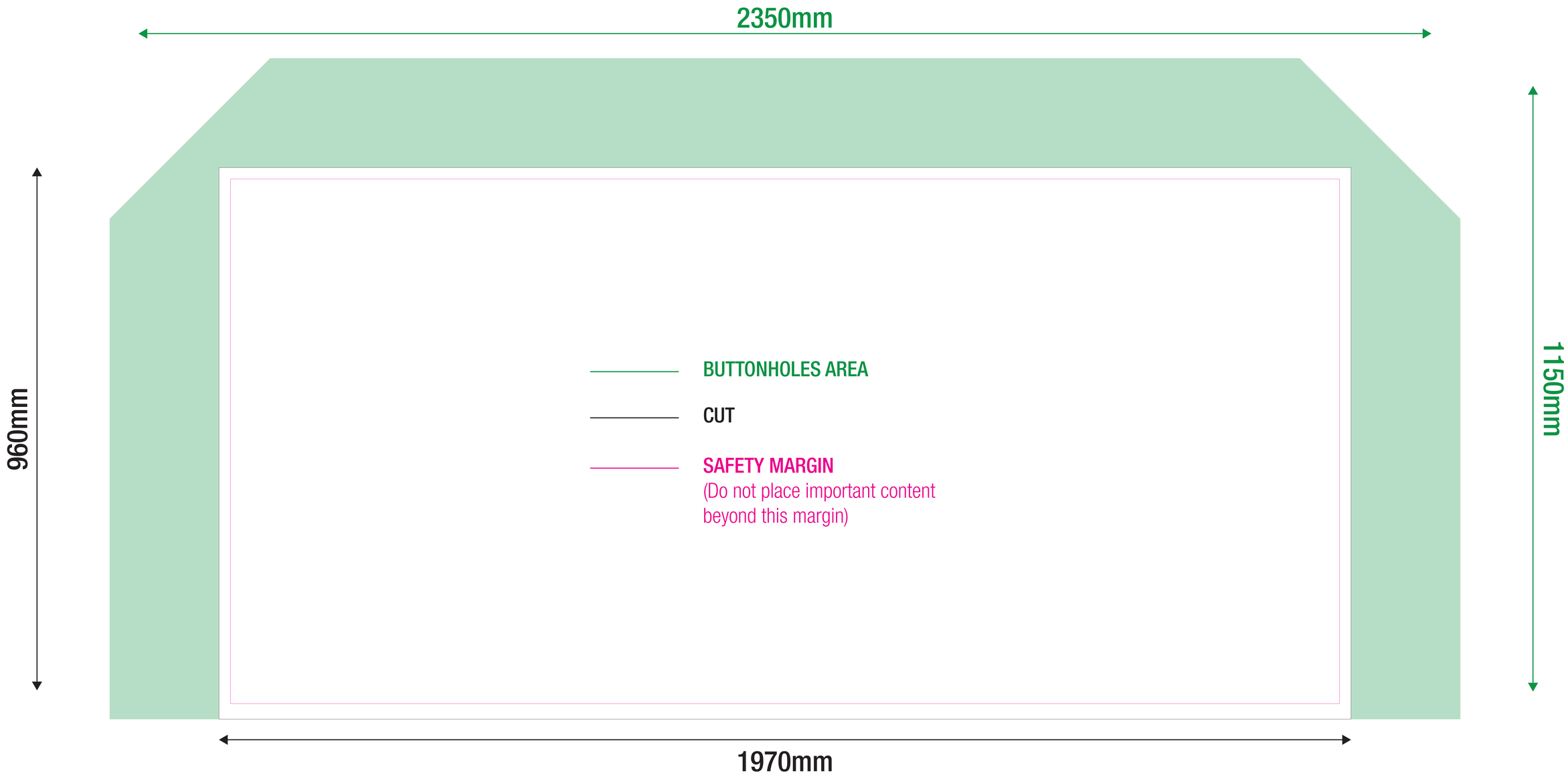

STUDIOSTANDS.it®
soluzioni espositive & stampa digitale

Template 1:1 scale - Barrier with additional modules

INFO FILE

Formats: .eps .pdf .jpg .tiff
Color profile: CMYK
Images: 100dpi - 1000dpi (for 1:10 scale files)
Font: converted into paths
Die path: cutting path only (where present)

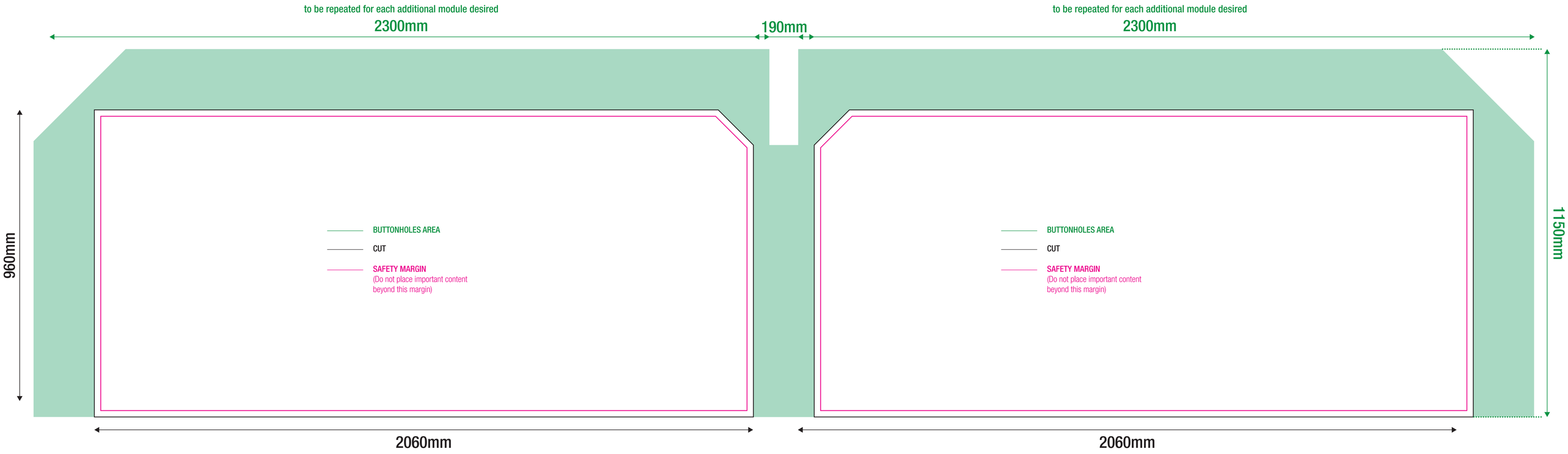

STUDIOSTANDS.it
soluzioni espositive & stampa digitale