ASSEMBLY INSTRUCTIONS - black top version

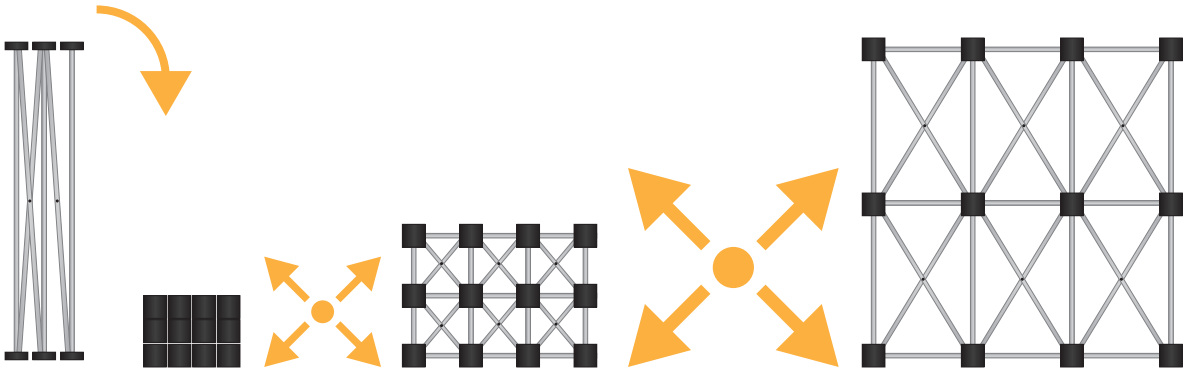

1.Open the Pop-Up umbrella structure

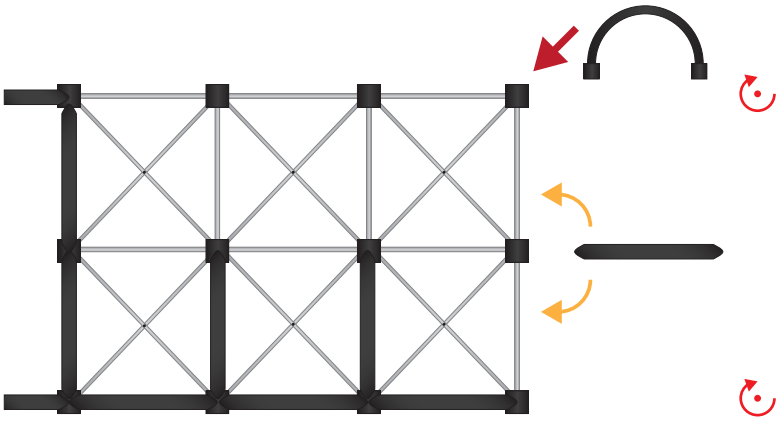

2. Apply the metal bars in the appropriate shapes between the fittings and the curved bars at the upper and lower side ends

3. Wrap the printed profile making the magnetic stripes on the back of the panel coincide with those applied to the structure

4. Open the wooden panel of the top by inserting the locking pins present in the shapes of the pop-up structure

youtube.com/StudioStandsSrl
for the assembly video tutorial

other SOLUTIONS / **DESK POP-UP black top**

STUDIOSTANDS.it®
soluzioni espositive & stampa digitale

ASSEMBLY INSTRUCTIONS - birch top version

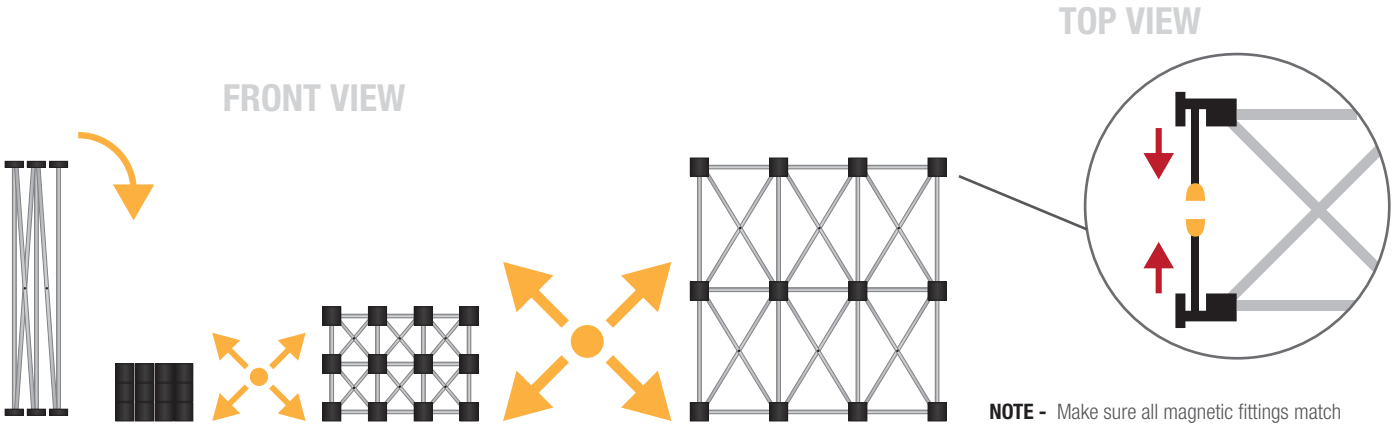

1. Open the Pop-Up umbrella structure
(the side to be left facing down has adjustable knurled feet)

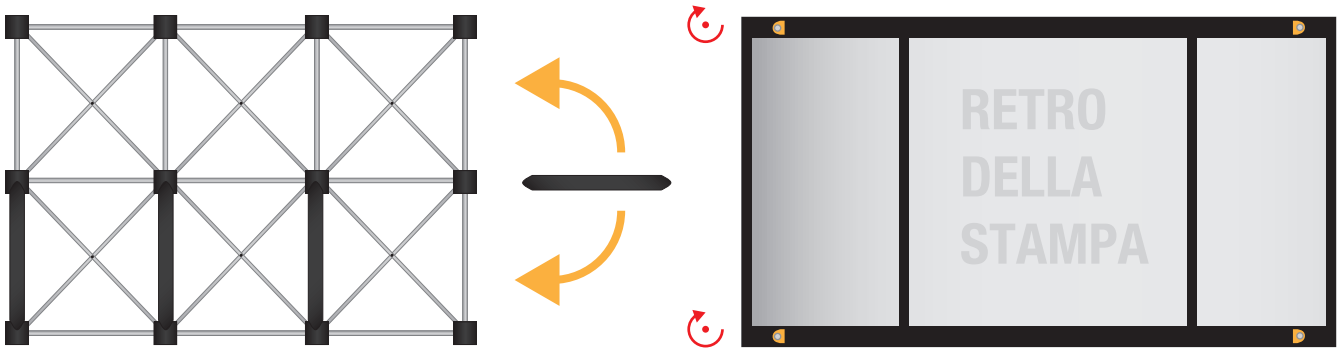

2. Apply the rigid vertical magnetic bars in the appropriate shapes between the fittings (in the birch top version there are NO perimeter curved bars)

3. The horizontal bars (flexible) with magnetic hook are pre-assembled on the back of the print.
Wrap the print around the structure, making the magnetic bars and the shaped parts coincide with each other

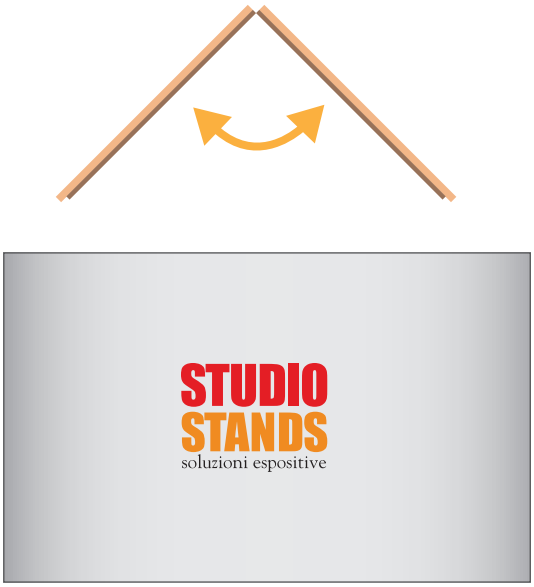

4. Open the wooden panel of the top by inserting the locking pins present in the shapes of the pop-up structure

youtube.com/StudioStandsSrl
for the assembly video tutorial

other SOLUTIONS / **DESK POP-UP birch top**

STUDIOSTANDS.it®
soluzioni espositive & stampa digitale

ASSEMBLY INSTRUCTIONS

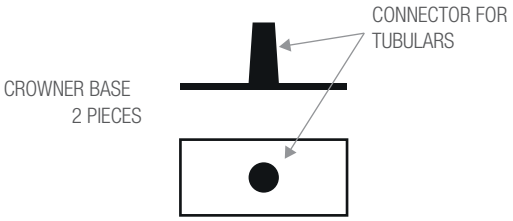

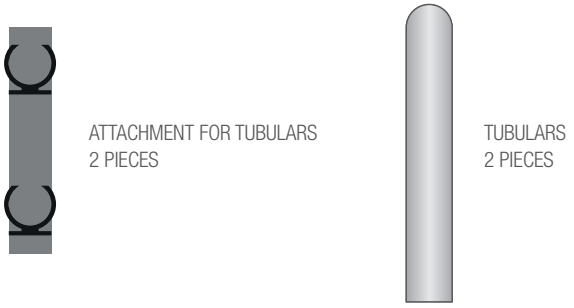

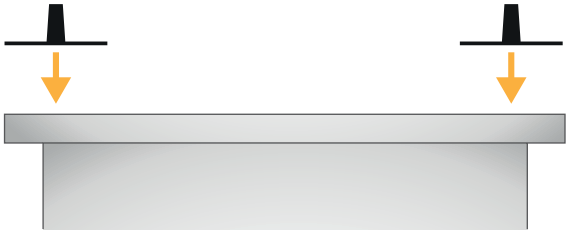

1. Fix the supports to the desk top with double-sided tape

2. Apply the attachments for the tubes to the back of the Crowner with double-sided tape and the self-tapping screws supplied.

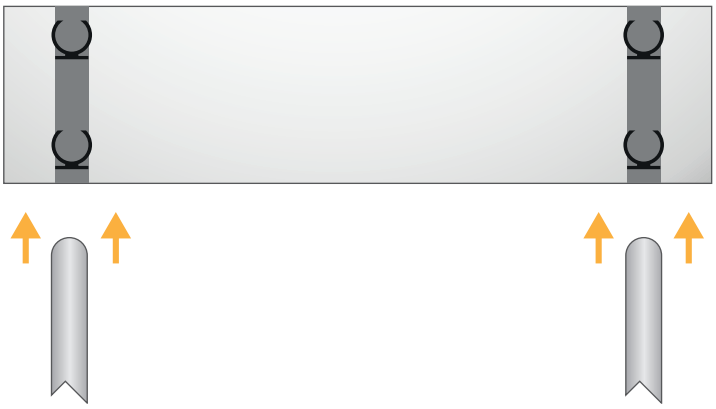

3. Hook the tubes to the appropriate attachments

4. Insert the tubes into the previously applied couplings

STUDIOSTANDS.it®
soluzioni espositive & stampa digitale

POP-UP DESK BODY - black top

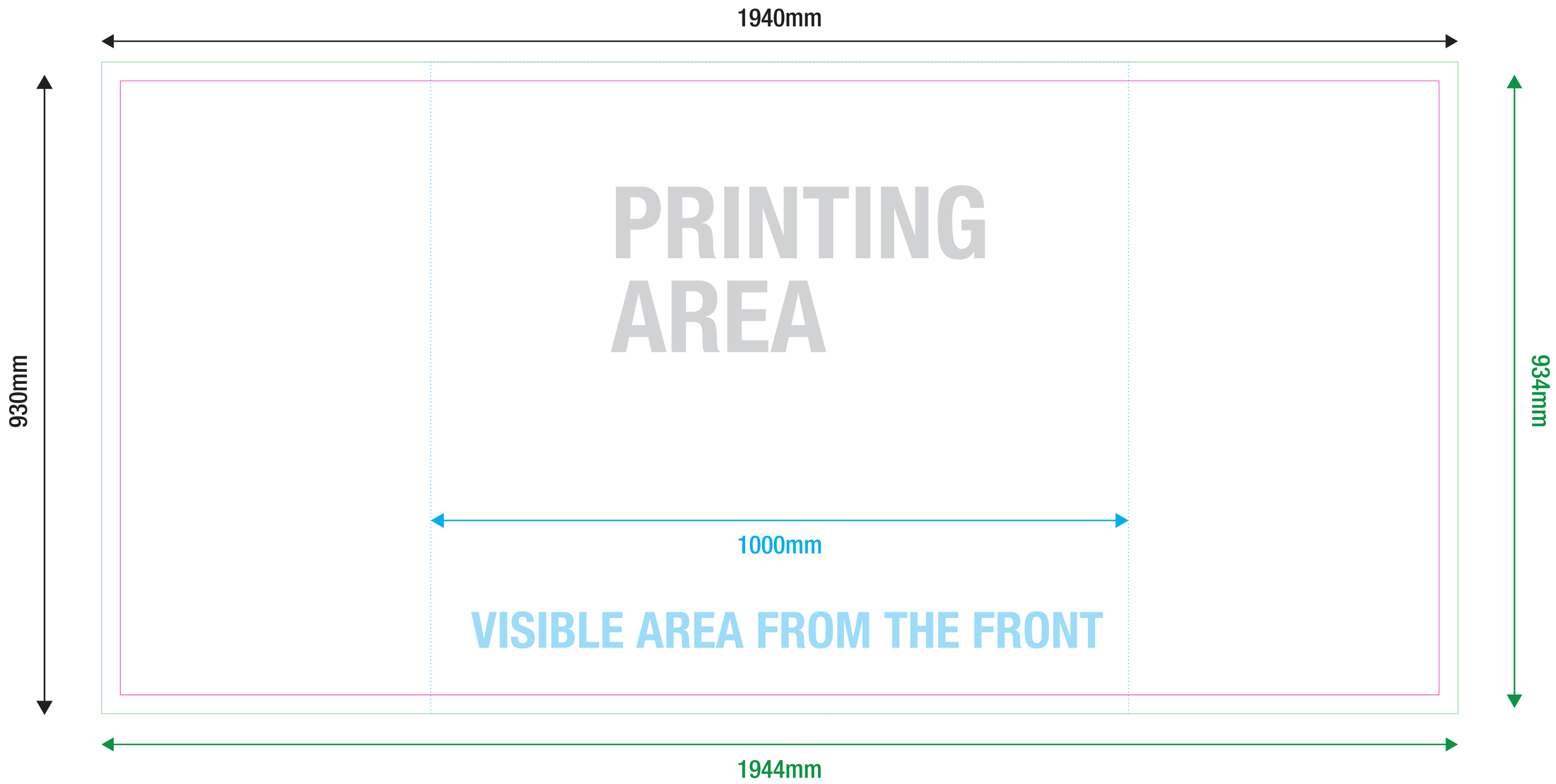

INDICATIVE TRACKS

POP-UP DESK BODY - birch top

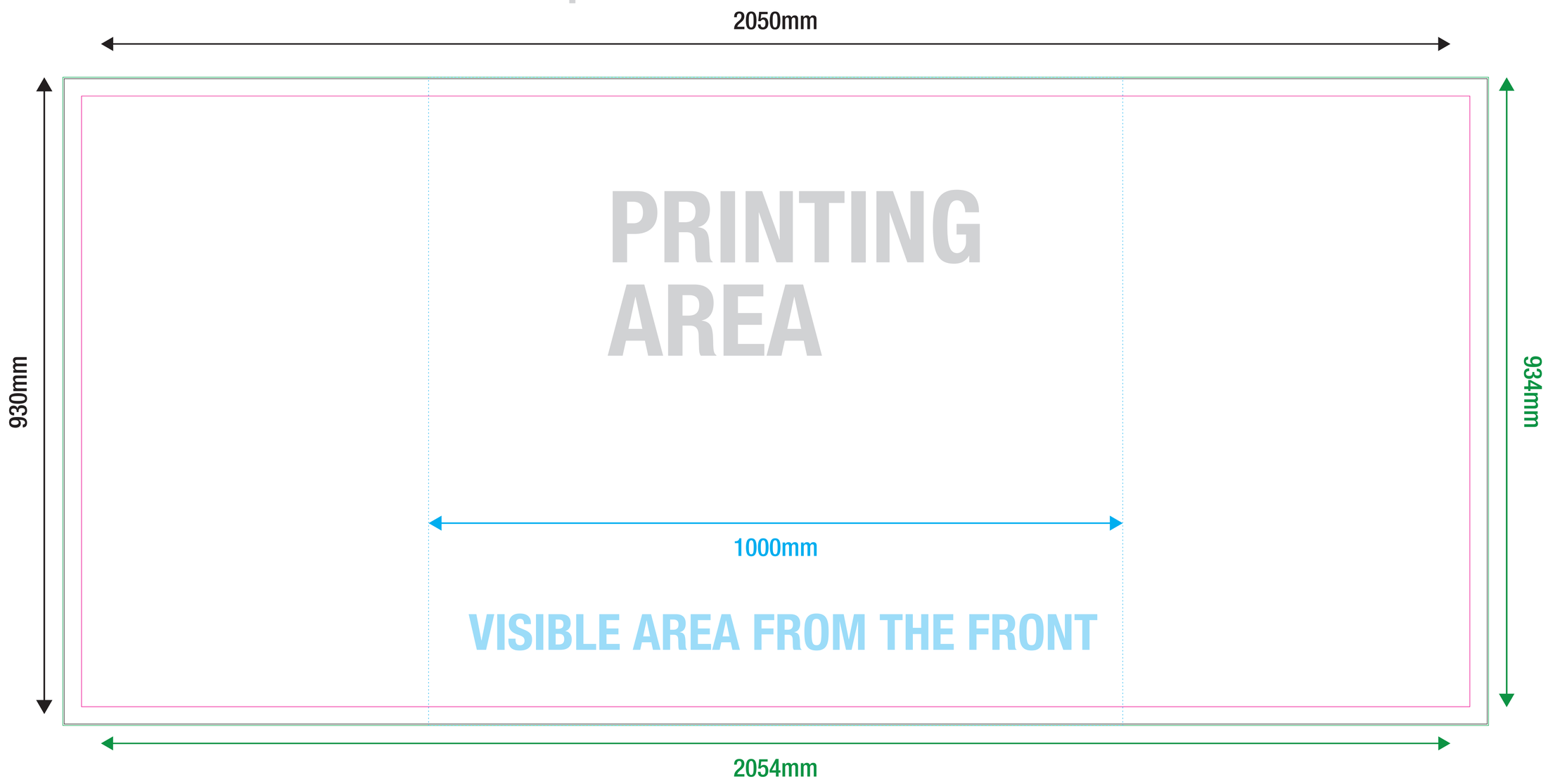

ABUNDANCE

CUT

SAFETY MARGIN
(Do not place important content beyond this margin))

INFO FILE

Formats: .eps .pdf .jpg .tiff

Color profile: CMYK

Images: 100dpi - 1000dpi (for 1:10 scale files)

Fonts: converted into paths

Die path: only cutting path (where present)

other SOLUTIONS / **DESK POP-UP**

STUDIOSTANDS.it®
soluzioni espositive & stampa digitale

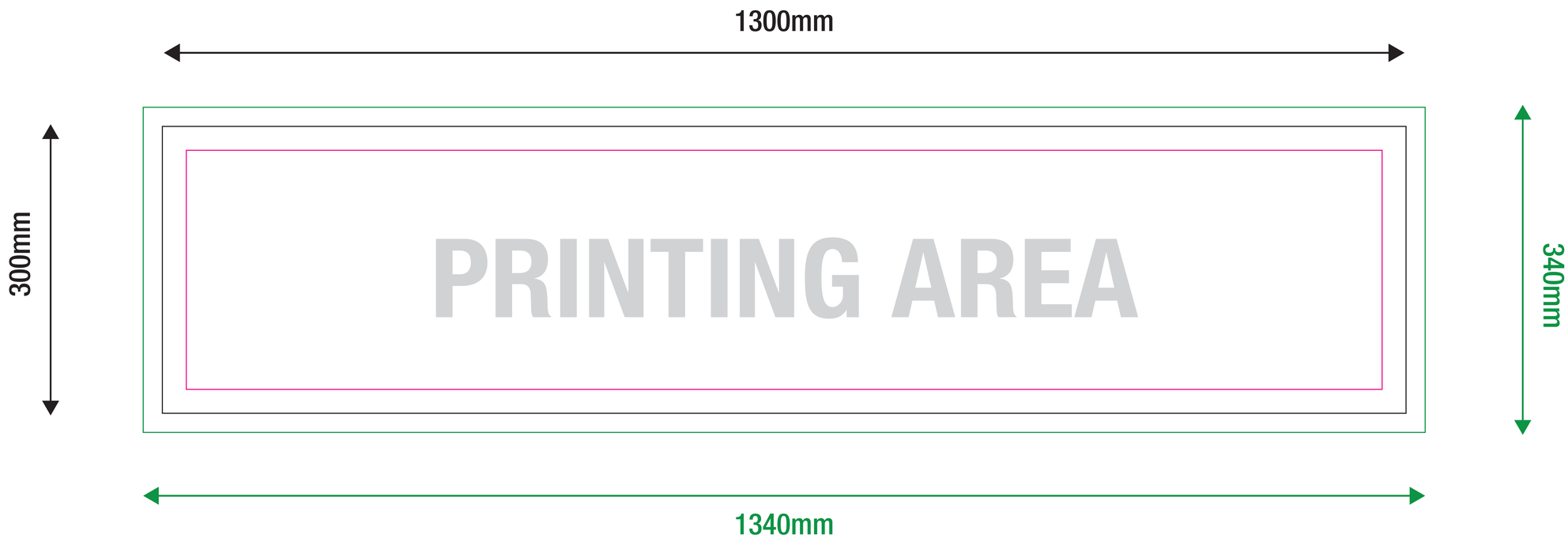

ABUNDANCE

CUT

SAFETY MARGIN
(Do not place important content beyond this margin))

INFO FILE

Formats: .eps .pdf .jpg .tiff

Color profile: CMYK

Images: 100dpi - 1000dpi (for 1:10 scale files)

Fonts: converted into paths

Die path: only cutting path (where present)

other SOLUTIONS / CROWNER *(optional)*

STUDIOSTANDS.it®
soluzioni espositive & stampa digitale