TEXTILE FRAME - LUX
ASSEMBLY INSTRUCTIONS

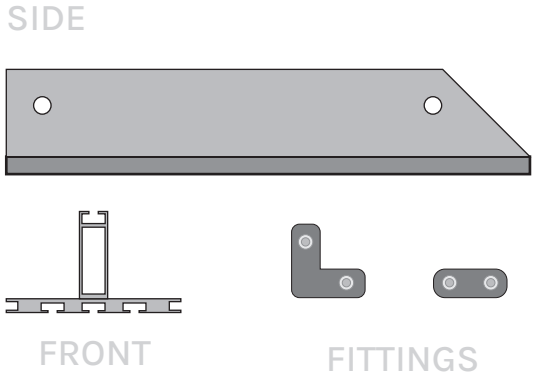

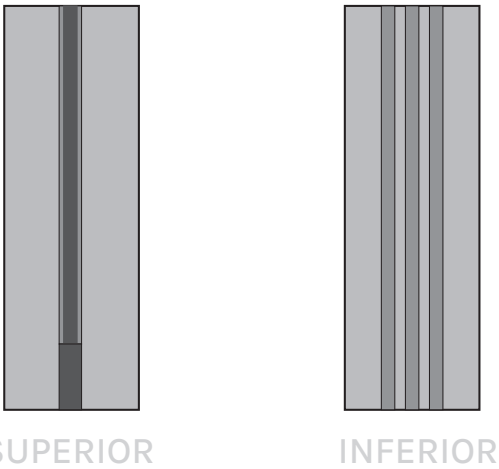

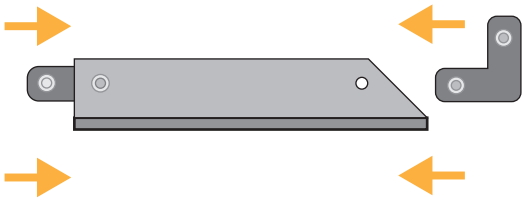

1. Insert the fitting into the profile until the button stop clicks

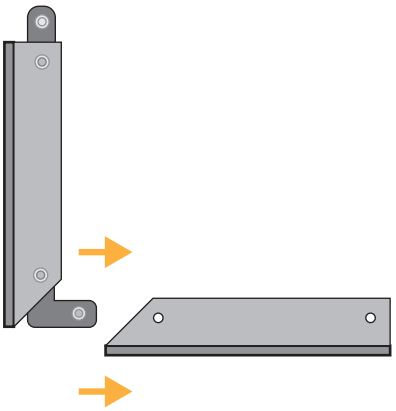

2. Continue assembling the structure in the same way

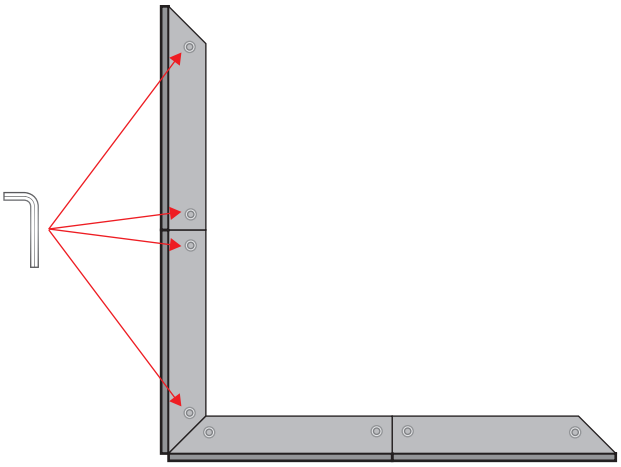

3. Once the structure has been assembled, secure the fixing using the supplied Allen key

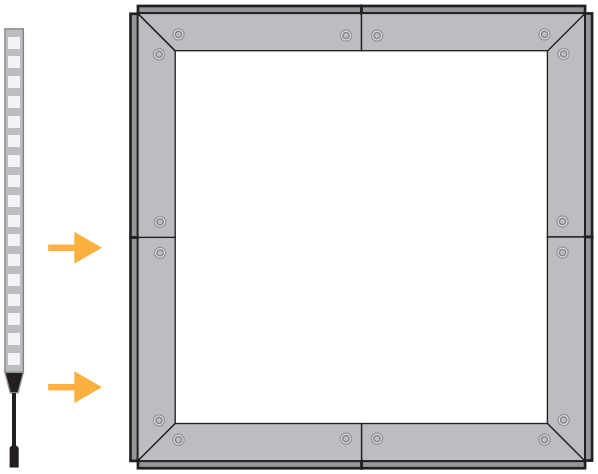

4. Apply LED to the internal frame of the display, making the power cable come out of the hole provided.

- Attention - the type of LEDs supplied may vary depending on the type of configuration chosen

WATCH THE VIDEO TUTORIAL
youtube.com/studioStandsSrl

STUDIOSTANDS.it®
soluzioni espositive & stampa digitale

5. Apply the print to the structure by inserting the silicone profile into the appropriate shaping of the

6. To turn on Textile Frame Lux, simply connect the display to a normal 220V socket.

NOTE - This instruction sheet presents the assembly of a simple frame.
The product allows different configurations; the assembly procedure remains the same.

INFO FILE

Formats:
.eps .pdf .jpg .tiff
Color profile:
CMYK
Images:
included within the file at at least 100dpi resolution in 1:1 scale or 1000dpi for 1:10 scale works
Fonts:
converted into paths
Die path:
Keep ONLY the outermost path - all other paths must be removed
Crop marks/register/color bars/file info:
DO NOT insert inside the file

ABUNDANCE

CUT

SAFETY MARGIN
(Do not place important content beyond this margin)

STUDIOSTANDS.it®
soluzioni espositive & stampa digitale

1:1 SCALE TEMPLATE
wall-mounted / self-supporting version 600x1800mm
see page 2 for file info

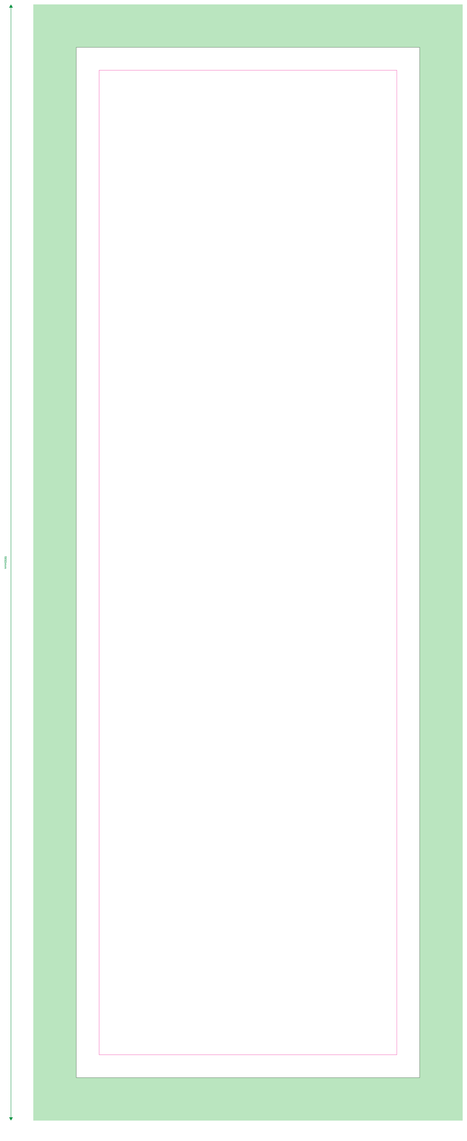

1:1 SCALE TEMPLATE
wall-mounted / self-supporting version 800x1800mm
see page 2 for file info

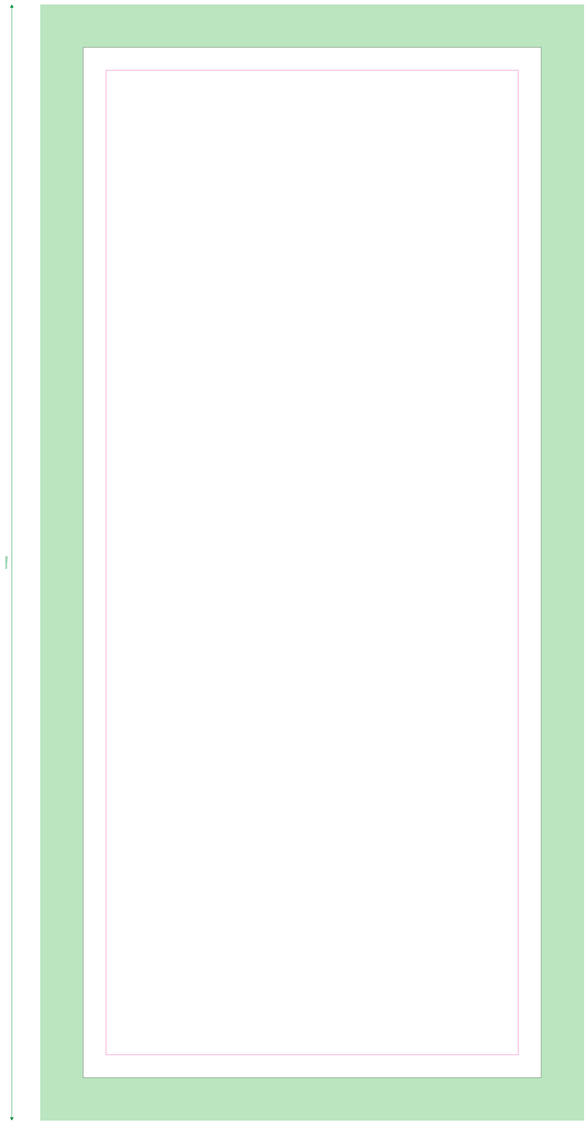

1:1 SCALE TEMPLATE
wall-mounted / self-supporting version 100x2000mm
see page 2 for file info

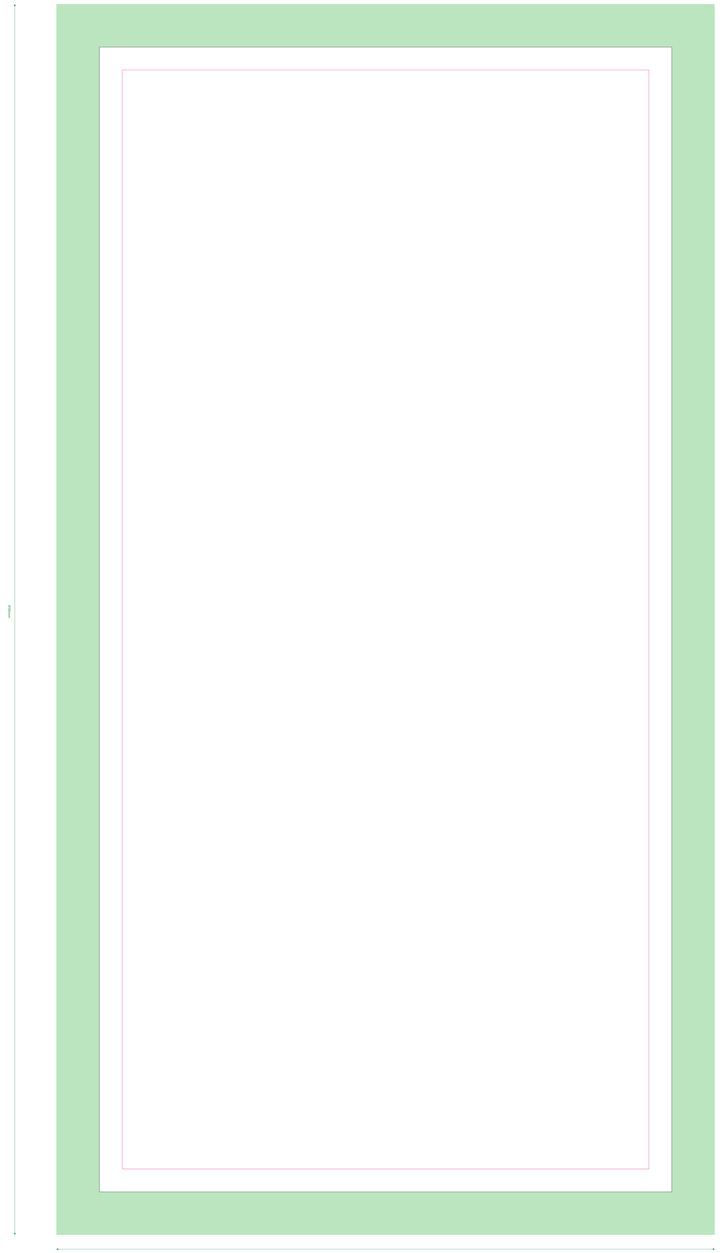

TEMPLATE
wall-mounted / free-standing version customized size
see page 2 for file info

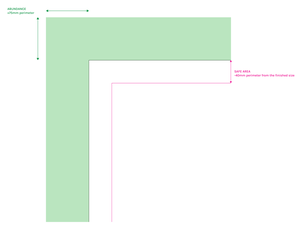

STUDIOSTANDS.it®
soluzioni espositive & stampa digitale